# CUSTOMER DRAWING

Amphenol TPI
2023 -05- 04
REGISTERED COPY

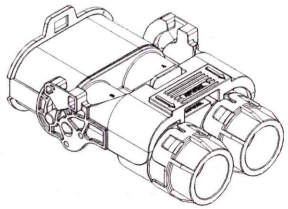

| REVISIONS | | | | | |
|---|---|---|---|---|---|
| REV# | ECN# | REVISION ACTION | REV.BY: | APPR.BY: | DATE |
| A | -- | INITIAL RELEASE | Jack | James | 03/16/2020 |
| B | -- | Add new parts and Key U/V | Star | James | 10/13/2020 |
| C | -- | Add Key W/T and Change the temperature of technical points | Star | JL | 12/03/2021 |
| D | -- | Change operating temperature, voltage | JS | JL | 08/09/2022 |
| E | -- | Change specification parameters | Hogan | JL | 03/21/2023 |

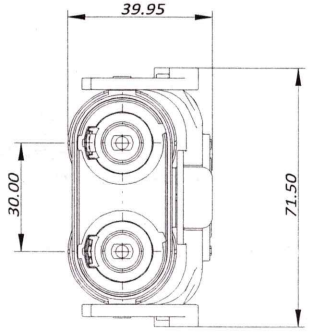


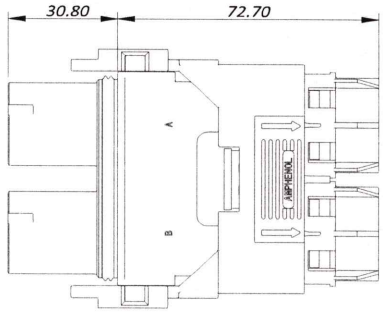


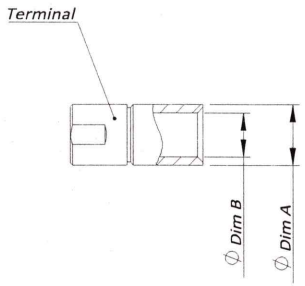


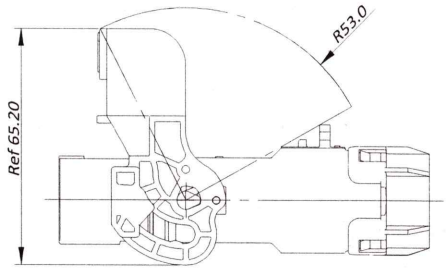


## 订购信息 Ordering Information

PL482 X - 30 1 - 50 - 2 -5

| Key and Color | HVIL | Cable Size | Cable Type: |
|---|---|---|---|
| "X",Orange<br>"Y",Black<br>"U",Yellow<br>"V",Green<br>"W",Red<br>"T",Blue | "0", NO HVIL<br>"1",With HVIL | "70"=70mm2<br>"50"=50mm2 | "-5",Huber+Suhner |

C

规格参数(Spec.):

1.工作温度 Operating temperature：-40°C ~ +125°C. D
2.带高压互锁 Electrical interlock (HVIL).
3.额定电流 Current rating:
Power: 50mm^2,200A;70mm^2,250A; HVIL: 5A.
4.额定电压 Operating voltage:
Power: 1500 VDC; Signal: 60 VDC. D
5.耐 电 压 Dielectric withstanding voltage:
A.与插座对插后,Pin与铁壳之间
When mated, between pin and metal shell: 6000 VDC. E
B.与插座对插后,Pin与HVIL之间
When mated, between pin and HVIL: 6000 VDC. E
C.与插座对插后,HVIL与铁壳之间
When mated, between HVIL and metal shell: 500 VDC.
D.与插座对插前,两个HVIL端子之间耐压
Before mating, between two HVIL terminals: 500 VDC.
6.防护等级 Protection class:Mated-IP6k9k & IP67,unmated-IP2X.
7.机械寿命 Mating cycle:100 Min.
8.带CPA的摇杆系统 Latch system with CPA.
9.绝缘材料满足UL94 V-0 The insulation material meets the requirements of UL94V-0. C E
10.外壳材料：铝合金镀镍Material：Aluminum alloy with Nickel plating.
11.镀灰锌/锌镍合金,符合RoHS,满足500H中性盐雾实验
Gray Zinc/Nickel(ZnNi)Plating.RoHS compliant,Rated at 500hours salt spray.
12.产品满足RoHS和Reach要求. RoHS and Reach compliant. C
13.绝缘体为140°RTI材料. The insulators are 140° RTI material. D

## Standard Part List:

| Model No. | H+S Part No. | Conductor Dia. max. (mm) | Overall-Dia. Nominal(mm) | Outside-Dia. of terminal(mm):"A" | Inside-Dia. of terminal(mm):"B" |
|---|---|---|---|---|---|
| PL482(X)-30X-70-2-5 | 85005047 | 11.6 | 15.20±0.30 | 16.7±0.3 | 12.2±0.3 |
| PL482(X)-30X-50-2-5 | 85005041 | 9.4 | 13.25±0.25 | 14.0±0.3 | 10.0±0.3 |

Key Characteristics C Critical 关键特性
Contact Amphenol for Latest Definition S Significant 重要特性

AMPHENOL TPI

**Amphenol Technical Products International Asia.**

| 第三角投影 THIRD ANGLE PROJECTION | 页 面 SHEET | 幅面 SIZE | 版次 REV. | 比例 SCALE |
|---|---|---|---|---|
| | 1 OF 2 | A4 | E | -- |

PART NAME: PL10mm G2 2POS Straight Plug Unshielding cable

| 签 名 SIGNATURE | 日期 DATE |
|---|---|
| 制 图 DRAWN Hogan | 03/21/2023 |
| 审 核 CHECKED | 04/17/2023 |
| 批 准 APPROVAL | |

UNLESS OTHERWISE SPECIFIED
1) All dimensions are in metric(mm).
2) Tolerances are as follows:
1.PL DEC ± 1.00
2.PL DEC ± 0.50
3.PL DEC ± 0.20
Angles ±1°

DWG NO: PL482X-30X-XX-2-5

CUST PART # | CUST REV.

THIS DRAWING IS SUPPLIED FOR INFORMATION ONLY. DESIGN FEATURES, SPECIFICATIONS AND PERFORMANCE DATA SHOWN HEREON ARE THE PROPERTY OF THE AMPHENOL CORPORATION. NO RIGHTS OF REPRODUCTION ARE IMPLIED. ALL DIMENSIONS ARE SUBJECT TO NORMAL MANUFACTURING VARIATIONS.

| 型号 Model | Kit Package P/N | Bulk Package P/N |
|---|---|---|
| PL482X-300-50-2-5 | AC-HA012001 | AC-HA012001-2 |
| PL482Y-300-50-2-5 | AC-HA012002 | AC-HA012002-2 |
| PL482U-300-50-2-5 | AC-HA016955 | AC-HA016955-2 |
| PL482V-300-50-2-5 | AC-HA016956 | AC-HA016956-2 |
| PL482W-300-50-2-5 | AC-HA016957 | AC-HA016957-2 |
| PL482T-300-50-2-5 | AC-HA016958 | AC-HA016958-2 |
| PL482X-300-70-2-5 | AC-HA012003 | AC-HA012003-2 |
| PL482Y-300-70-2-5 | AC-HA012004 | AC-HA012004-2 |
| PL482U-300-70-2-5 | AC-HA016959 | AC-HA016959-2 |
| PL482V-300-70-2-5 | AC-HA016960 | AC-HA016960-2 |
| PL482W-300-70-2-5 | AC-HA016961 | AC-HA016961-2 |
| PL482T-300-70-2-5 | AC-HA016962 | AC-HA016962-2 |
| PL482X-301-50-2-5 | AC-HA012005 | AC-HA012005-2 |
| PL482Y-301-50-2-5 | AC-HA012006 | AC-HA012006-2 |
| PL482U-301-50-2-5 | AC-HA016963 | AC-HA016963-2 |
| PL482V-301-50-2-5 | AC-HA016964 | AC-HA016964-2 |
| PL482W-301-50-2-5 | AC-HA016965 | AC-HA016965-2 |
| PL482T-301-50-2-5 | AC-HA016966 | AC-HA016966-2 |
| PL482X-301-70-2-5 | AC-HA012007 | AC-HA012007-2 |
| PL482Y-301-70-2-5 | AC-HA012008 | AC-HA012008-2 |
| PL482U-301-70-2-5 | AC-HA016967 | AC-HA016967-2 |
| PL482V-301-70-2-5 | AC-HA016968 | AC-HA016968-2 |
| PL482W-301-70-2-5 | AC-HA016969 | AC-HA016969-2 |
| PL482T-301-70-2-5 | AC-HA016970 | AC-HA016970-2 |

REVISIONS

| REV# | ECN# | REVISION ACTION | REV.BY: | APPR.BY: | DATE |
|---|---|---|---|---|---|
| A | -- | INITIAL RELEASE | Jack | James | 03/16/2020 |
| B | -- | Add new parts and Key U/V | Star | James | 10/13/2020 |
| C | -- | Add Key W/T and Change the temperature of technical points | Star | JL | 12/03/2021 |
| D | -- | Change operating temperature, voltage | JS | JL | 08/09/2022 |
| E | -- | Change specification parameters | Hogan | JL | 03/21/2023 |

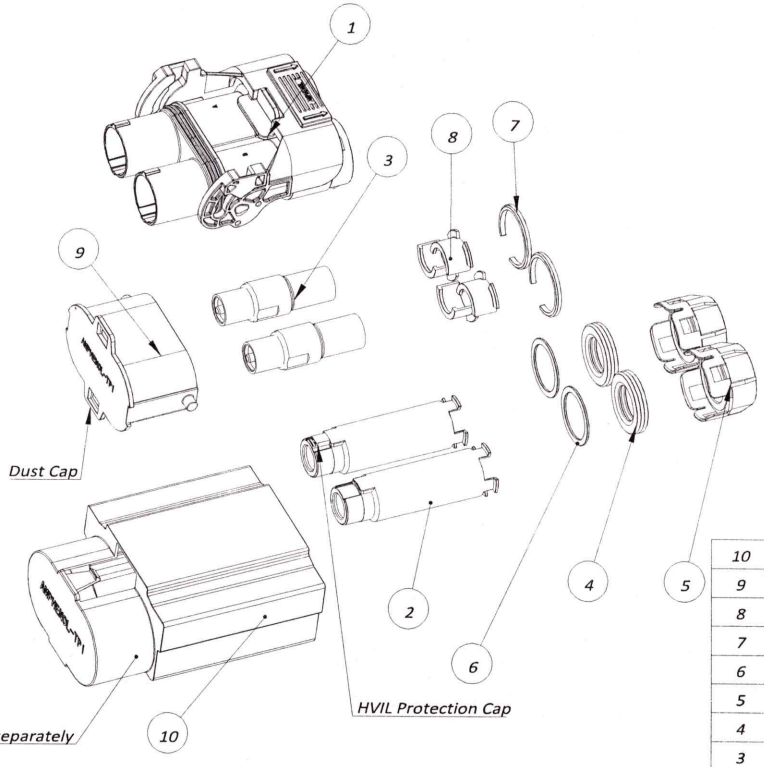


Amphenol TPI
2023 -05- 04
REGISTERED COPY

| ITEM | DESCRIPTION | QTY | REMARK |
|---|---|---|---|
| 10 | PL300 G2 **2 POS plug protection cap** | 1 | Order P/N AC-CP001616 |
| 9 | PL300 G2 **Dust Cap for Plug** | 1 | |
| 8 | PL300 G2 Lock Housing1 | 4 | Different P/N are used according to different Cable sizes |
| 7 | PL300 G2 Lock Housing2 | 2 | |
| 6 | PL300 G2 Metal Gasket | 2 | Different P/N are used according to different Cable sizes |
| 5 | PL300 G2 Tail Cap for straight plug | 2 | Different P/N are used according to different Cable sizes |
| 4 | PL300 G2 cable sealing for straight plug | 2 | Different P/N are used according to different Cable sizes |
| 3 | PL300 G2 Terminal Assy | 2 | |
| 2 | PL300 G2 Insulation Sleeve Assy | 2 | |
| 1 | PL300 G2 Shell Plug Assy | 1 | Different P/N are used according to different Cable sizes |

MATERIALS LIST

AMPHENOL TPI

**Amphenol Technical Products International Asia.**

| 第三角投影 THIRD ANGLE PROJECTION | 页 面 SHEET | 幅面 SIZE | 版次 REV. | 比例 SCALE |
|---|---|---|---|---|
| | 2 OF 2 | A4 | E | -- |

PART NAME: PL10mm G2 2POS Straight Plug Unshielding cable

DWG NO: PL482X-30X-XX-2-5

CUST PART # | CUST REV.

| | | |
|---|---|---|
| 签 名 SIGNATURE | | 日期 DATE |
| 制 图 DRAWN | Hogan | 03/21/2023 |
| 审 核 CHECKED | | 04/17/2023 |
| 批 准 APPROVAL | | |

UNLESS OTHERWISE SPECIFIED
1) All dimensions are in metric(mm).
2) Tolerances are as follows:
1.PL DEC ± 1.00
2.PL DEC ± 0.50
3.PL DEC ± 0.20
Angles ±1°

Key Characteristics Contact Amphenol for Latest Definition
C Critical 关键特性
5 Significant 重要特性

THIS DRAWING IS SUPPLIED FOR INFORMATION ONLY. DESIGN FEATURES, SPECIFICATIONS AND PERFORMANCE DATA SHOWN HEREON ARE THE PROPERTY OF THE AMPHENOL CORPORATION. NO RIGHTS OF REPRODUCTION ARE IMPLIED. ALL DIMENSIONS ARE SUBJECT TO NORMAL MANUFACTURING VARIATIONS.

# CUSTOMER DRAWING

| REVISIONS | | | | | |
|---|---|---|---|---|---|
| REV# | ECN# | REVISION ACTION | REV.BY: | APPR.BY: | DATE |
| A | -- | INITIAL RELEASE | Jack | James | 03/16/2020 |
| B | -- | Add new parts and Key U/V | Star | James | 10/13/2020 |
| C | -- | Add Key W/T and Change the temperature of technical points | Star | JL | 12/03/2021 |
| D | -- | Change operating temperature, voltage | JS | JL | 08/09/2022 |
| E | -- | Change specification parameters | Hogan | JL | 03/21/2023 |

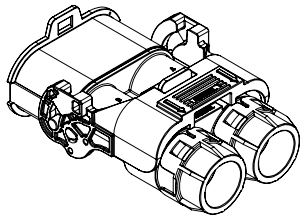

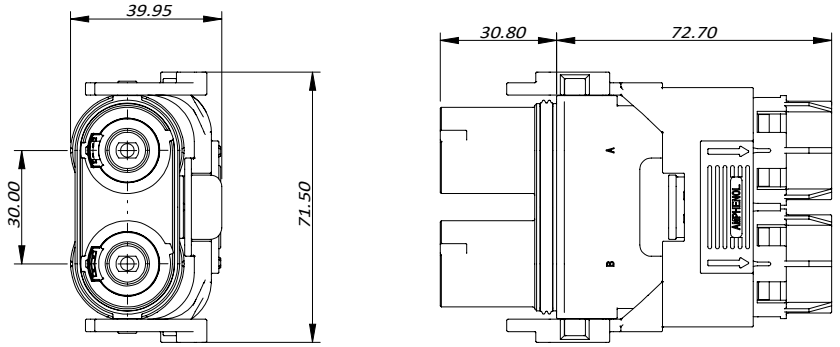


## 订购信息 Ordering Information

PL482 X - 30 1 - 50 - 2 -5

- Key and Color △C: "X",Orange; "Y",Black; "U",Yellow; "V",Green; "W",Red; "T",Blue
- HVIL: "0", NO HVIL; "1",With HVIL
- Cable Size: "70"=70mm2; "50"=50mm2
- Cable Type: "-5",Huber+Suhner

规格参数(Spec.):

1.工作温度 Operating temperature：-40°C ~ +125°C. △D

2.带高压互锁 Electrical interlock (HVIL).

3.额定电流 Current rating:
Power: 50mm^2,200A;70mm^2,250A; HVIL: 5A.

4.额定电压 Operating voltage:
Power: 1500 VDC; Signal: 60 VDC. △D

5.耐 电 压 Dielectric withstanding voltage:
A.与插座对插后,Pin与铁壳之间
When mated, between pin and metal shell: 6000 VDC. △E
B.与插座对插后,Pin与HVIL之间
When mated, between pin and HVIL: 6000 VDC. △E
C.与插座对插后,HVIL与铁壳之间
When mated, between HVIL and metal shell: 500 VDC.
D.与插座对插前,两个HVIL端子之间耐压
Before mating, between two HVIL terminals: 500 VDC.

6.防护等级 Protection class:Mated-IP6k9k & IP67,unmated-IP2X.

7.机械寿命 Mating cycle:100 Min.

8.带CPA的摇杆系统 Latch system with CPA.

9.绝缘材料满足UL94 V-0 The insulation material meets the requirements of UL94V-0. △C △E

10.外壳材料：铝合金镀镍Material：Aluminum alloy with Nickel plating.

11.镀灰锌/锌镍合金,符合RoHS,满足500H中性盐雾实验
Gray Zinc/Nickel(ZnNi)Plating.RoHS compliant,Rated at 500hours salt spray.

12.产品满足RoHS和Reach要求. RoHS and Reach compliant. △C

13.绝缘体为140°RTI材料. The insulators are 140° RTI material. △D

## Standard Part List:

| Model No. | H+S Part No. | Conductor Dia. max. (mm) | Overall-Dia. Nominal(mm) | Outside-Dia. of terminal(mm):"A" | Inside-Dia. of terminal(mm):"B" |
|---|---|---|---|---|---|
| PL482(X)-30X-70-2-5 | 85005047 | 11.6 | 15.20±0.30 | 16.7±0.3 | 12.2±0.3 |
| PL482(X)-30X-50-2-5 | 85005041 | 9.4 | 13.25±0.25 | 14.0±0.3 | 10.0±0.3 |

Key Characteristics Contact Amphenol for Latest Definition: △C Critical 关键特性; ☆S Significant 重要特性

| 签 名 SIGNATURE | | 日期 DATE |
|---|---|---|
| 制 图 DRAWN | Hogan | 03/21/2023 |
| 审 核 CHECKED | | |
| 批 准 APPROVAL | | |

**Amphenol Technical Products International Asia.**

| 第三角投影 THIRD ANGLE PROJECTION | 页 面 SHEET | 幅面 SIZE | 版次 REV. | 比例 SCALE |
|---|---|---|---|---|
| | 1 OF 2 | A4 | E | -- |

PART NAME: PL10mm G2 2POS Straight Plug Unshielding cable

UNLESS OTHERWISE SPECIFIED
1) All dimensions are in metric(mm).
2) Tolerances are as follows:
1.PL DEC ± 1.00
2.PL DEC ± 0.50
3.PL DEC ± 0.20 Angles ±1°

DWG NO: PL482X-30X-XX-2-5

CUST PART # | CUST REV.

THIS DRAWING IS SUPPLIED FOR INFORMATION ONLY. DESIGN FEATURES, SPECIFICATIONS AND PERFORMANCE DATA SHOWN HEREON ARE THE PROPERTY OF THE AMPHENOL CORPORATION. NO RIGHTS OF REPRODUCTION ARE IMPLIED. ALL DIMENSIONS ARE SUBJECT TO NORMAL MANUFACTURING VARIATIONS.

| 型号 Model | Kit Package P/N | Bulk Package P/N |
|---|---|---|
| PL482X-300-50-2-5 | AC-HA012001 | AC-HA012001-2 |
| PL482Y-300-50-2-5 | AC-HA012002 | AC-HA012002-2 |
| PL482U-300-50-2-5 | AC-HA016955 | AC-HA016955-2 |
| PL482V-300-50-2-5 | AC-HA016956 | AC-HA016956-2 |
| PL482W-300-50-2-5 | AC-HA016957 | AC-HA016957-2 |
| PL482T-300-50-2-5 | AC-HA016958 | AC-HA016958-2 |
| PL482X-300-70-2-5 | AC-HA012003 | AC-HA012003-2 |
| PL482Y-300-70-2-5 | AC-HA012004 | AC-HA012004-2 |
| PL482U-300-70-2-5 | AC-HA016959 | AC-HA016959-2 |
| PL482V-300-70-2-5 | AC-HA016960 | AC-HA016960-2 |
| PL482W-300-70-2-5 | AC-HA016961 | AC-HA016961-2 |
| PL482T-300-70-2-5 | AC-HA016962 | AC-HA016962-2 |
| PL482X-301-50-2-5 | AC-HA012005 | AC-HA012005-2 |
| PL482Y-301-50-2-5 | AC-HA012006 | AC-HA012006-2 |
| PL482U-301-50-2-5 | AC-HA016963 | AC-HA016963-2 |
| PL482V-301-50-2-5 | AC-HA016964 | AC-HA016964-2 |
| PL482W-301-50-2-5 | AC-HA016965 | AC-HA016965-2 |
| PL482T-301-50-2-5 | AC-HA016966 | AC-HA016966-2 |
| PL482X-301-70-2-5 | AC-HA012007 | AC-HA012007-2 |
| PL482Y-301-70-2-5 | AC-HA012008 | AC-HA012008-2 |
| PL482U-301-70-2-5 | AC-HA016967 | AC-HA016967-2 |
| PL482V-301-70-2-5 | AC-HA016968 | AC-HA016968-2 |
| PL482W-301-70-2-5 | AC-HA016969 | AC-HA016969-2 |
| PL482T-301-70-2-5 | AC-HA016970 | AC-HA016970-2 |

| REVISIONS | | | | | |
|---|---|---|---|---|---|
| REV# | ECN# | REVISION ACTION | REV.BY: | APPR.BY: | DATE |
| A | -- | INITIAL RELEASE | Jack | James | 03/16/2020 |
| B | -- | Add new parts and Key U/V | Star | James | 10/13/2020 |
| C | -- | Add Key W/T and Change the temperature of technical points | Star | JL | 12/03/2021 |
| D | -- | Change operating temperature, voltage | JS | JL | 08/09/2022 |
| E | -- | Change specification parameters | Hogan | JL | 03/21/2023 |

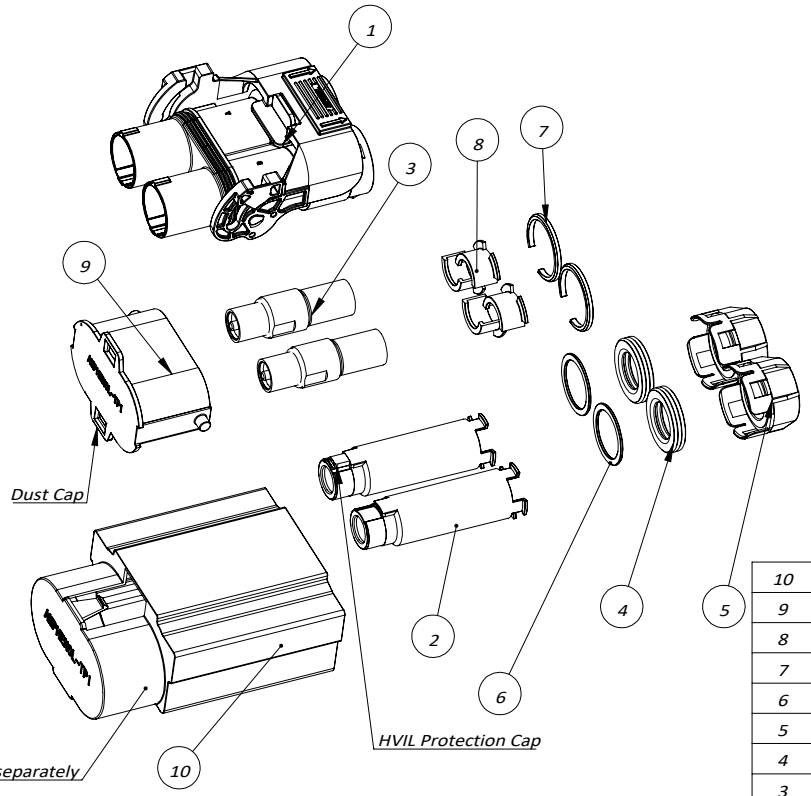


| ITEM | DESCRIPTION | QTY | REMARK |
|---|---|---|---|
| 10 | PL300 G2 **2 POS plug protection cap** | 1 | Order P/N AC-CP001616 |
| 9 | PL300 G2 **Dust Cap for Plug** | 1 | |
| 8 | PL300 G2 Lock Housing1 | 4 | Different P/N are used according to different Cable sizes |
| 7 | PL300 G2 Lock Housing2 | 2 | |
| 6 | PL300 G2 Metal Gasket | 2 | Different P/N are used according to different Cable sizes |
| 5 | PL300 G2 Tail Cap for straight plug | 2 | Different P/N are used according to different Cable sizes |
| 4 | PL300 G2 cable sealing for straight plug | 2 | Different P/N are used according to different Cable sizes |
| 3 | PL300 G2 Terminal Assy | 2 | |
| 2 | PL300 G2 Insulation Sleeve Assy | 2 | |
| 1 | PL300 G2 Shell Plug Assy | 1 | Different P/N are used according to different Cable sizes |

MATERIALS LIST

AMPHENOL TPI

**Amphenol Technical Products International Asia.**

| 第三角投影 THIRD ANGLE PROJECTION | 页 面 SHEET | 幅面 SIZE | 版次 REV. | 比例 SCALE |
|---|---|---|---|---|
| | 2 OF 2 | A4 | E | -- |

**PART NAME:** PL10mm G2 2POS Straight Plug Unshielding cable

**DWG NO:** PL482X-30X-XX-2-5

CUST PART # | CUST REV.

| 签 名 SIGNATURE | | 日期 DATE |
|---|---|---|
| 制 图 DRAWN | Hogan | 03/21/2023 |
| 审 核 CHECKED | | |
| 批 准 APPROVAL | | |

UNLESS OTHERWISE SPECIFIED
1) All dimensions are in metric(mm).
2) Tolerances are as follows:
1.PL DEC ± 1.00
2.PL DEC ± 0.50
3.PL DEC ± 0.20 Angles ±1°

Key Characteristics Contact Amphenol for Latest Definition
C Critical 关键特性
S Significant 重要特性

THIS DRAWING IS SUPPLIED FOR INFORMATION ONLY. DESIGN FEATURES, SPECIFICATIONS AND PERFORMANCE DATA SHOWN HEREON ARE THE PROPERTY OF THE AMPHENOL CORPORATION. NO RIGHTS OF REPRODUCTION ARE IMPLIED. ALL DIMENSIONS ARE SUBJECT TO NORMAL MANUFACTURING VARIATIONS.