CUSTOMER DRAWING

Amphenol TPI
2022 -11- 07
REGISTERED COPY

REVISIONS					
REV#	ECN#	REVISION ACTION	REV.BY:	APPR.BY:	DATE
B	--	Add new parts and Key U/V	Star	JL	10/15/2020
C	--	新增H6/H8/PM8规格料号	Star	JL	11/20/2020
D	--	Add M10 specification	Star	JL	02/23/2021
E	--	Add Key W/T and add detailded view of lug	Star	JL	04/19/2021
F	--	Change W/T key Angle and change the temperature of technical points	Star	JL	11/09/2021
G	--	Change of Operating temperature,voltage and Dielectric withstanding voltage	JS	JL	08/09/2022
H	--	Add view of dust cover	JS	JL	11/04/2022

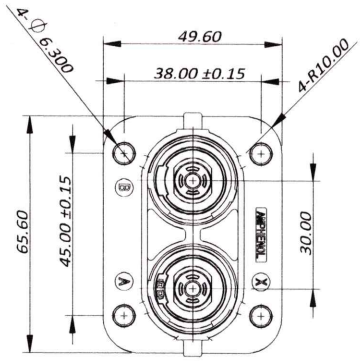

Recommended panel cut out

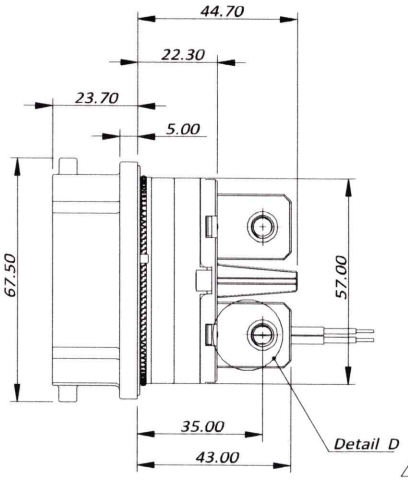

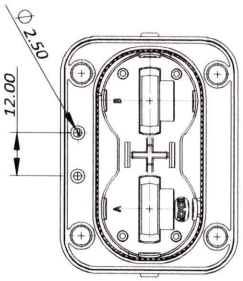

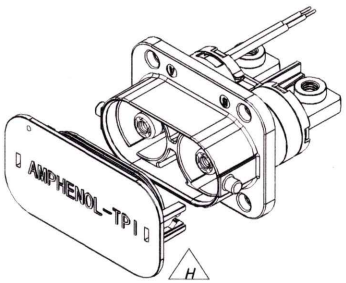

M

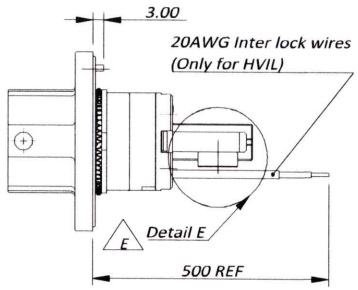

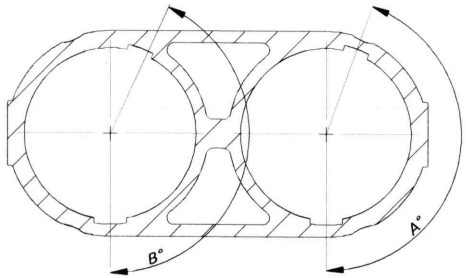

M向键位示意图

Key	角度A°	角度B°
X	160	160
Y	200	200
U	160	200
V	200	160
W	None/无	90
T	270	None/无

F

规格参数(Spec.):

1.工作温度 Operating temperature : -40°C ~ +125°C. G
2.带高压互锁 Electrical interlock (HVIL).
3.额定电流 Current rating:
Power: 300A; HVIL: 5A.
4.额定电压 Operating voltage:
Power: 1500 VDC; Signal: 60 VDC. G
5.耐 电 压 Dielectric withstanding voltage:
A.与插座对插后,Pin与铁壳之间
When mated, between pin and metal shell: 6000 VDC.
B.与插座对插后,Pin与HVIL之间
When mated, between pin and HVIL: 6000 VDC. G
C.与插座对插后,HVIL与铁壳之间
When mated, between HVIL and metal shell: 500 VDC.
D.与插座对插前,两个HVIL端子之间耐压
Before mating, between two HVIL terminals: 500 VDC.
6.防护等级 Protection class:Mated-IP6k9k & IP67,unmated-IP2X.
7.电磁屏蔽 360°full Shielding.
8.机械寿命 Mating cycle:100 Min.
9.推荐法兰盘螺丝安装扭矩 Recommended Screw
Assembly Torque on Flange : 6.2~7.6Nm
10.推荐铜排安装扭矩Recommended Fasten Torque on Lug:
M6: 3.6~4.4Nm, M8: 7.2~8.8Nm, M10: 17.1~20.9Nm
11.镀灰锌/锌镍合金,满足500H中性盐雾实验
Gray Zinc/Nickel(ZnNi)Plating.Rated at 500hours salt spray.
12.产品满足RoHS和REACH要求,.Parts must be RoHS and reach compliant. C
13.绝缘体为140°RTI材料. The insulators are 140° RTI material. G

订购信息 Ordering Information

PL082 X - 30 1 - 10 PM 6 - 2

- Key and Color: "X", Orange; "Y", Black; "U", Yellow; "V", Green; "W", Red; "T", Blue (B, E)
- HVIL: "0", NO HVIL; "1",With HVIL
- Hole Type: "D", through hole; "M",thread hole; "H",slot hole; "PM",punched nut
- Hole Size

AMPHENOL TPI	Amphenol Technical Products International Asia.				
第三角投影 THIRD ANGLE PROJECTION	页 面 SHEET	幅面 SIZE	版次 REV.	比例 SCALE	PART NAME: PL300 G2 2POS Rcpt Lug
	1 OF 3	A4	G	--	
签 名 SIGNATURE	日期 DATE	UNLESS OTHERWISE SPECIFIED 1) All dimensions are in metric(mm). 2) Tolerances are as follows: 1.PL DEC ± 1.00 2.PL DEC ± 0.50 3.PL DEC ± 0.20 Angles ±1°			DWG NO: PL082X-30X-10XX-2
制 图 DRAWN July.su	08/09/2022				
审 核 CHECKED	10/04/2022				
批 准 APPROVAL	2022.11.4				CUST PART # / CUST REV.

Key Characteristics Contact Amphenol for Latest Definition: C Critical 关键特性; S Significant 重要特性

THIS DRAWING IS SUPPLIED FOR INFORMATION ONLY. DESIGN FEATURES, SPECIFICATIONS AND PERFORMANCE DATA SHOWN HEREON ARE THE PROPERTY OF THE AMPHENOL CORPORATION. NO RIGHTS OF REPRODUCTION ARE IMPLIED. ALL DIMENSIONS ARE SUBJECT TO NORMAL MANUFACTURING VARIATIONS.

P/N 料号	Model No. 型号	P/N 料号	Model No. 型号
AC-HA010932	PL082X-300-10M6-2	AC-HA010944	PL082X-301-10M6-2
AC-HA010933	PL082Y-300-10M6-2	AC-HA010945	PL082Y-301-10M6-2
AC-HA016971	PL082U-300-10M6-2	AC-HA016991	PL082U-301-10M6-2
AC-HA016972	PL082V-300-10M6-2	AC-HA016992	PL082V-301-10M6-2
AC-HA016973	PL082W-300-10M6-2	AC-HA016993	PL082W-301-10M6-2
AC-HA016974	PL082T-300-10M6-2	AC-HA016994	PL082T-301-10M6-2
AC-HA010934	PL082X-300-10M8-2	AC-HA010946	PL082X-301-10M8-2
AC-HA010935	PL082Y-300-10M8-2	AC-HA010947	PL082Y-301-10M8-2
AC-HA016975	PL082U-300-10M8-2	AC-HA016995	PL082U-301-10M8-2
AC-HA016976	PL082V-300-10M8-2	AC-HA016996	PL082V-301-10M8-2
AC-HA016977	PL082W-300-10M8-2	AC-HA016997	PL082W-301-10M8-2
AC-HA016978	PL082T-300-10M8-2	AC-HA016998	PL082T-301-10M8-2
AC-HA010938	PL082X-300-10D6-2	AC-HA010950	PL082X-301-10D6-2
AC-HA010939	PL082Y-300-10D6-2	AC-HA010951	PL082Y-301-10D6-2
AC-HA016979	PL082U-300-10D6-2	AC-HA016999	PL082U-301-10D6-2
AC-HA016980	PL082V-300-10D6-2	AC-HA017000	PL082V-301-10D6-2
AC-HA016981	PL082W-300-10D6-2	AC-HA017001	PL082W-301-10D6-2
AC-HA016982	PL082T-300-10D6-2	AC-HA017002	PL082T-301-10D6-2
AC-HA010940	PL082X-300-10D8-2	AC-HA010952	PL082X-301-10D8-2
AC-HA010941	PL082Y-300-10D8-2	AC-HA010953	PL082Y-301-10D8-2
AC-HA016983	PL082U-300-10D8-2	AC-HA017003	PL082U-301-10D8-2
AC-HA016984	PL082V-300-10D8-2	AC-HA017004	PL082V-301-10D8-2
AC-HA016985	PL082W-300-10D8-2	AC-HA017005	PL082W-301-10D8-2
AC-HA016986	PL082T-300-10D8-2	AC-HA017006	PL082T-301-10D8-2
AC-HA010942	PL082X-300-10D10-2	AC-HA010954	PL082X-301-10D10-2
AC-HA010943	PL082Y-300-10D10-2	AC-HA010955	PL082Y-301-10D10-2
AC-HA016987	PL082U-300-10D10-2	AC-HA017007	PL082U-301-10D10-2
AC-HA016988	PL082V-300-10D10-2	AC-HA017008	PL082V-301-10D10-2
AC-HA016989	PL082W-300-10D10-2	AC-HA017009	PL082W-301-10D10-2
AC-HA016990	PL082T-300-10D10-2	AC-HA017010	PL082T-301-10D10-2
AC-HA011977	PL082X-300-10PM6-2	AC-HA011979	PL082X-301-10PM6-2
AC-HA011978	PL082Y-300-10PM6-2	AC-HA011980	PL082Y-301-10PM6-2
AC-HA017011	PL082U-300-10PM6-2	AC-HA017015	PL082U-301-10PM6-2
AC-HA017012	PL082V-300-10PM6-2	AC-HA017016	PL082V-301-10PM6-2
AC-HA017013	PL082W-300-10PM6-2	AC-HA017017	PL082W-301-10PM6-2
AC-HA017014	PL082T-300-10PM6-2	AC-HA017018	PL082T-301-10PM6-2
AC-HA017356	PL082X-300-10PM8-2	AC-HA017374	PL082X-301-10PM8-2
AC-HA017357	PL082Y-300-10PM8-2	AC-HA017375	PL082Y-301-10PM8-2
AC-HA017358	PL082U-300-10PM8-2	AC-HA017376	PL082U-301-10PM8-2
AC-HA017359	PL082V-300-10PM8-2	AC-HA017377	PL082V-301-10PM8-2
AC-HA017360	PL082W-300-10PM8-2	AC-HA017378	PL082W-301-10PM8-2
AC-HA017361	PL082T-300-10PM8-2	AC-HA017379	PL082T-301-10PM8-2
AC-HA017362	PL082X-300-10H6-2	AC-HA017380	PL082X-301-10H6-2
AC-HA017363	PL082Y-300-10H6-2	AC-HA017381	PL082Y-301-10H6-2
AC-HA017364	PL082U-300-10H6-2	AC-HA017382	PL082U-301-10H6-2
AC-HA017365	PL082V-300-10H6-2	AC-HA017383	PL082V-301-10H6-2
AC-HA017366	PL082W-300-10H6-2	AC-HA017384	PL082W-301-10H6-2
AC-HA017367	PL082T-300-10H6-2	AC-HA017385	PL082T-301-10H6-2
AC-HA017368	PL082X-300-10H8-2	AC-HA017386	PL082X-301-10H8-2
AC-HA017369	PL082Y-300-10H8-2	AC-HA017387	PL082Y-301-10H8-2
AC-HA017370	PL082U-300-10H8-2	AC-HA017388	PL082U-301-10H8-2
AC-HA017371	PL082V-300-10H8-2	AC-HA017389	PL082V-301-10H8-2
AC-HA017372	PL082W-300-10H8-2	AC-HA017390	PL082W-301-10H8-2
AC-HA017373	PL082T-300-10H8-2	AC-HA017391	PL082T-301-10H8-2
AC-HA010936	PL082X-300-10M10-2	AC-HA010948	PL082X-301-10M10-2
AC-HA010937	PL082Y-300-10M10-2	AC-HA010949	PL082Y-301-10M10-2
AC-HA017824	PL082U-300-10M10-2	AC-HA017828	PL082U-301-10M10-2
AC-HA017825	PL082V-300-10M10-2	AC-HA017829	PL082V-301-10M10-2
AC-HA017826	PL082W-300-10M10-2	AC-HA017830	PL082W-301-10M10-2
AC-HA017827	PL082T-300-10M10-2	AC-HA017831	PL082T-301-10M10-2

Amphenol TPI
2022 -11- 07
REGISTERED COPY

REVISIONS

REV#	ECN#	REVISION ACTION	REV.BY:	APPR.BY:	DATE
C	--	新增H6/H8/PM8规格料号	Star	JL	11/20/2020
D	--	Add M10 specification	Star	JL	02/23/2021
E	--	Add Key W/T and add detailded view of lug	Star	JL	04/19/2021
F	--	Change W/T key Angle and change the temperature of technical points	Star	JL	11/09/2021
G	--	Change of Operating temperature,voltage and Dielectric withstanding voltage	JS	JL	08/09/2022
H	--	Add view of dust cover	JS	JL	11/04/2022

E

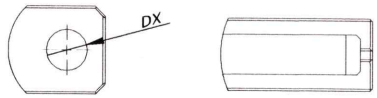

Model No	Through hole size DX
PL082X-30X-10D10-2	Ø 10.50±0.10
PL082X-30X-10D8-2	Ø 8.50±0.10
PL082X-30X-10D6-2	Ø 6.50±0.10

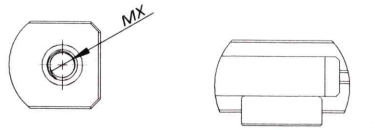

Model No	Punch Nut size MX
PL082X-30X-10PM6-2	M6
PL082X-30X-10PM8-2	M8

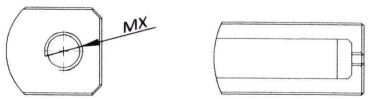

Model No	Thread hole size MX
PL082X-30X-10M10-2	M10
PL082X-30X-10M8-2	M8
PL082X-30X-10M6-2	M6

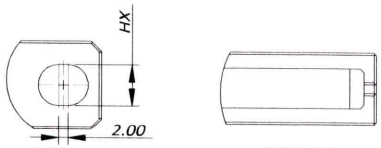

Model No	Slot hole size HX
PL082X-30X-10H10-2	10.50±0.10
PL082X-30X-10H8-2	8.50±0.10
PL082X-30X-10H6-2	6.50±0.10

THIS DRAWING IS SUPPLIED FOR INFORMATION ONLY. DESIGN FEATURES, SPECIFICATIONS AND PERFORMANCE DATA SHOWN HEREON ARE THE PROPERTY OF THE AMPHENOL CORPORATION. NO RIGHTS OF REPRODUCTION ARE IMPLIED. ALL DIMENSIONS ARE SUBJECT TO NORMAL MANUFACTURING VARIATIONS.

AMPHENOL TPI

Amphenol Technical Products International Asia.

第三角投影 THIRD ANGLE PROJECTION	页面 SHEET	幅面 SIZE	版次 REV.	比例 SCALE	PART NAME:
	2OF 3	A4	H	--	PL300 G2 2POS Rcpt Lug

签名 SIGNATURE		日期 DATE
制图 DRAWN	July.su	11/04/2022
审核 CHECKED	JG	11/04/2022
批准 APPROVAL		2022/11/4

UNLESS OTHERWISE SPECIFIED
1) All dimensions are in metric(mm).
2) Tolerances are as follows:
1.PL DEC ± 1.00
2.PL DEC ± 0.50
3.PL DEC ± 0.20
Angles ±1°

DWG NO: PL082X-30X-10XX-2

CUST PART # | CUST REV.

Key Characteristics Contact Amphenol for Latest Definition
C Critical 关键特性
S Significant 重要特性

REVISIONS					
REV#	ECN#	REVISION ACTION	REV.BY:	APPR.BY:	DATE
C	--	新增H6/H8/PM8规格料号	Star	JL	11/20/2020
D	--	Add M10 specification	Star	JL	02/23/2021
E	--	Add Key W/T and add detailded view of lug	Star	JL	04/19/2021
F	--	Change W/T key Angle and change the temperature of technical points	Star	JL	11/09/2021
G	--	Change of Operating temperature,voltage and Dielectric withstanding voltage	JS	JL	08/09/2022
H	--	Add view of dust cover	JS	JL	11/04/2022

Amphenol TPI
2022 -11- 07
REGISTERED COPY

推荐面板开孔图 Recommended Panel cut out size

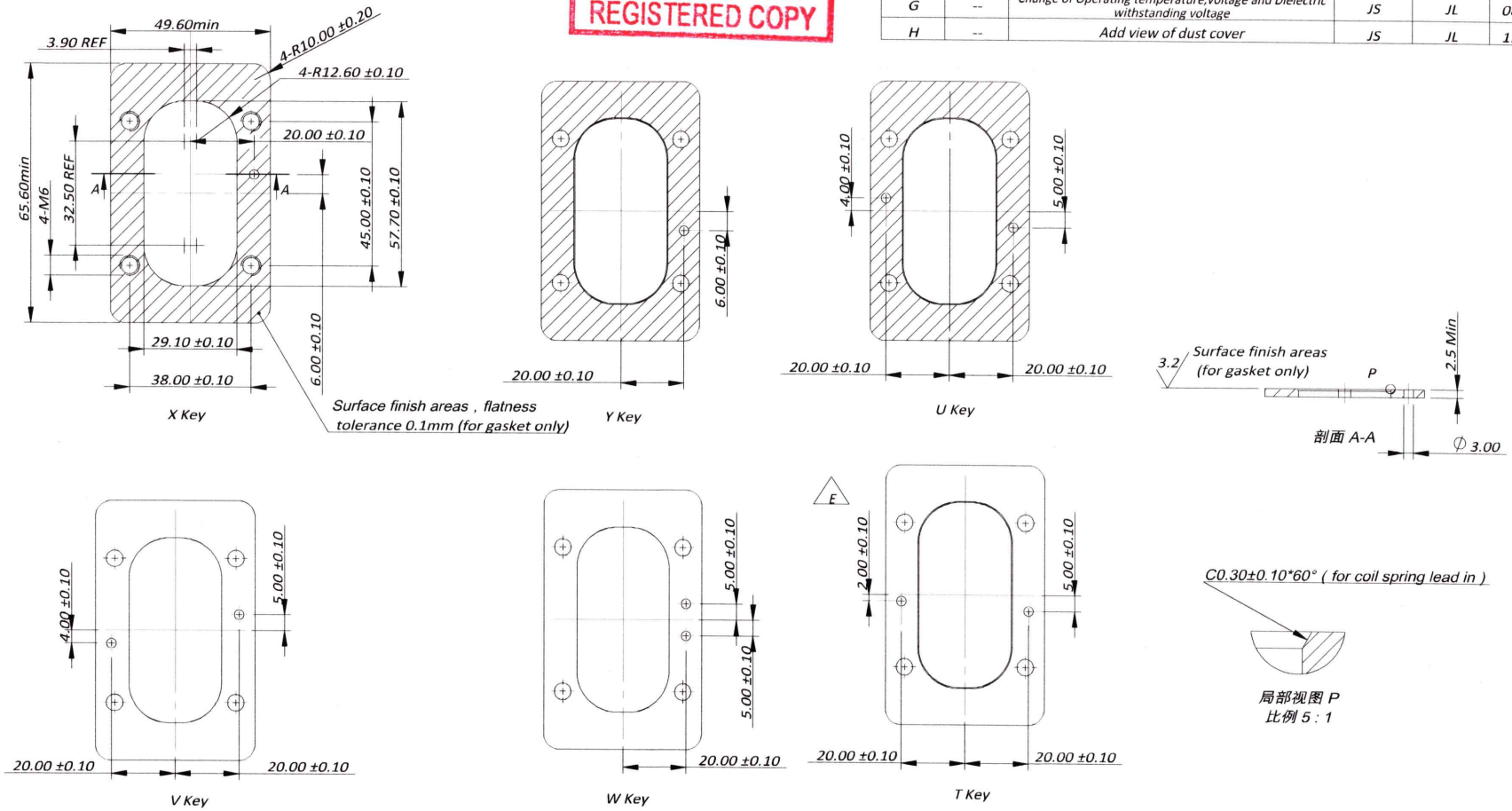

AMPHENOL TPI	Amphenol Technical Products International Asia.				
第三角投影 THIRD ANGLE PROJECTION	页面 SHEET	幅面 SIZE	版次 REV.	比例 SCALE	PART NAME: PL300 G2 2POS Rcpt Lug
	3 OF 3	A4	H	--	
签名 SIGNATURE	日期 DATE	UNLESS OTHERWISE SPECIFIED 1) All dimensions are in metric(mm). 2) Tolerances are as follows: 1.PL DEC ± 1.00 2.PL DEC ± 0.50 3.PL DEC ± 0.20 Angles ±1°			DWG NO: PL082X-30X-10XX-2
制图 DRAWN July.su	11/04/2022				CUST PART # / CUST REV.
审核 CHECKED JG	11/04/2022				
批准 APPROVAL James	2022.11.4				

Key Characteristics Contact Amphenol for Latest Definition
C Critical 关键特性
S Significant 重要特性

THIS DRAWING IS SUPPLIED FOR INFORMATION ONLY. DESIGN FEATURES, SPECIFICATIONS AND PERFORMANCE DATA SHOWN HEREON ARE THE PROPERTY OF THE AMPHENOL CORPORATION. NO RIGHTS OF REPRODUCTION ARE IMPLIED. ALL DIMENSIONS ARE SUBJECT TO NORMAL MANUFACTURING VARIATIONS.

CUSTOMER DRAWING

REVISIONS					
REV#	ECN#	REVISION ACTION	REV.BY:	APPR.BY:	DATE
B	--	Add new parts and Key U/V	Star	JL	10/15/2020
C	--	新增H6/H8/PM8规格料号	Star	JL	11/20/2020
D	--	Add M10 specification	Star	JL	02/23/2021
E	--	Add Key W/T and add detailded view of lug	Star	JL	04/19/2021
F	--	Change W/T key Angle and change the temperature of technical points	Star	JL	11/09/2021
G	--	Change of Operating temperature,voltage and Dielectric withstanding voltage	JS	JL	08/09/2022
H	--	Add view of dust cover	JS	JL	11/04/2022

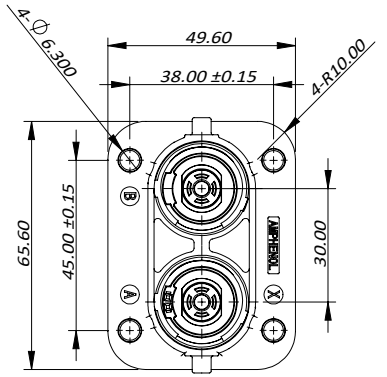

Recommended panel cut out

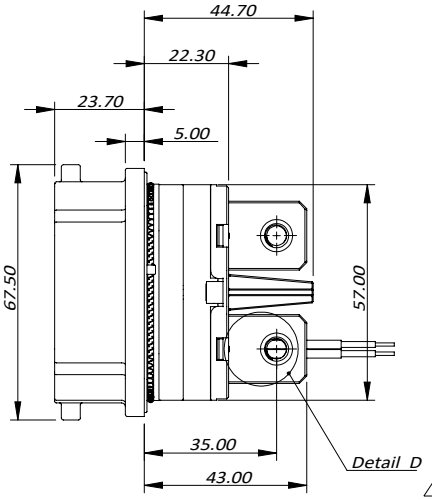

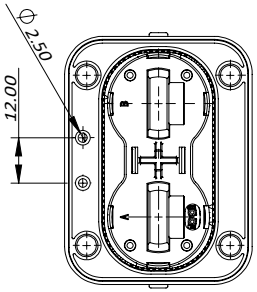

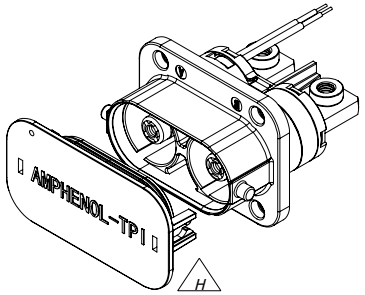

M

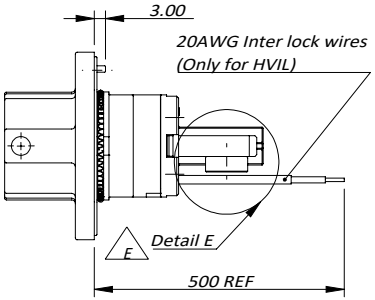

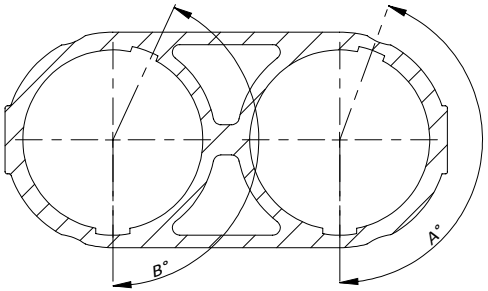

M向键位示意图

Key	角度A°	角度B°
X	160	160
Y	200	200
U	160	200
V	200	160
W	None/无	90
T	270	None/无

F

规格参数(Spec.):

1.工作温度 Operating temperature : -40°C ~ +125°C. G

2.带高压互锁 Electrical interlock (HVIL).

3.额定电流 Current rating:
Power: 300A; HVIL: 5A.

4.额定电压 Operating voltage:
Power: 1500 VDC; Signal: 60 VDC. G

5.耐 电 压 Dielectric withstanding voltage:
A.与插座对插后,Pin与铁壳之间
When mated, between pin and metal shell: 6000 VDC.
B.与插座对插后,Pin与HVIL之间
When mated, between pin and HVIL: 6000 VDC. G
C.与插座对插后,HVIL与铁壳之间
When mated, between HVIL and metal shell: 500 VDC.
D.与插座对插前,两个HVIL端子之间耐压
Before mating, between two HVIL terminals: 500 VDC.

6.防护等级 Protection class:Mated-IP6k9k & IP67,unmated-IP2X.

7.电磁屏蔽 360°full Shielding.

8.机械寿命 Mating cycle:100 Min.

9.推荐法兰盘螺丝安装扭矩 Recommended Screw Assembly Torque on Flange : 6.2~7.6Nm

10.推荐铜排安装扭矩Recommended Fasten Torque on Lug:
M6: 3.6~4.4Nm, M8: 7.2~8.8Nm, M10: 17.1~20.9Nm

11.镀灰锌/锌镍合金,满足500H中性盐雾实验
Gray Zinc/Nickel(ZnNi)Plating.Rated at 500hours salt spray.

12.产品满足RoHS和REACH要求,.Parts must be RoHS and reach compliant. C

13.绝缘体为140°RTI材料. The insulators are 140° RTI material. G

订购信息 Ordering Information

PL082 X - 30 1 - 10 PM 6 - 2

- Key and Color: "X", Orange; "Y", Black; "U", Yellow; "V", Green; "W", Red; "T", Blue (B, E)
- HVIL: "0", NO HVIL; "1",With HVIL
- Hole Type: "D", through hole; "M",thread hole; "H",slot hole; "PM",punched nut
- Hole Size

AMPHENOL TPI	Amphenol Technical Products International Asia.				
第三角投影 THIRD ANGLE PROJECTION	页 面 SHEET	幅面 SIZE	版次 REV.	比例 SCALE	PART NAME: PL300 G2 2POS Rcpt Lug
	1 OF 3	A4	G	--	
签 名 SIGNATURE		日期 DATE	UNLESS OTHERWISE SPECIFIED 1) All dimensions are in metric(mm). 2) Tolerances are as follows: 1.PL DEC ± 1.00 2.PL DEC ± 0.50 3.PL DEC ± 0.20 Angles ±1°		DWG NO: PL082X-30X-10XX-2
制 图 DRAWN	July.su	08/09/2022			CUST PART # / CUST REV.
审 核 CHECKED					
批 准 APPROVAL					

Key Characteristics Contact Amphenol for Latest Definition: C Critical 关键特性; S Significant 重要特性

THIS DRAWING IS SUPPLIED FOR INFORMATION ONLY. DESIGN FEATURES, SPECIFICATIONS AND PERFORMANCE DATA SHOWN HEREON ARE THE PROPERTY OF THE AMPHENOL CORPORATION. NO RIGHTS OF REPRODUCTION ARE IMPLIED. ALL DIMENSIONS ARE SUBJECT TO NORMAL MANUFACTURING VARIATIONS.

P/N 料号	Model No. 型号	P/N 料号	Model No. 型号
AC-HA010932	PL082X-300-10M6-2	AC-HA010944	PL082X-301-10M6-2
AC-HA010933	PL082Y-300-10M6-2	AC-HA010945	PL082Y-301-10M6-2
AC-HA016971	PL082U-300-10M6-2	AC-HA016991	PL082U-301-10M6-2
AC-HA016972	PL082V-300-10M6-2	AC-HA016992	PL082V-301-10M6-2
AC-HA016973	PL082W-300-10M6-2	AC-HA016993	PL082W-301-10M6-2
AC-HA016974	PL082T-300-10M6-2	AC-HA016994	PL082T-301-10M6-2
AC-HA010934	PL082X-300-10M8-2	AC-HA010946	PL082X-301-10M8-2
AC-HA010935	PL082Y-300-10M8-2	AC-HA010947	PL082Y-301-10M8-2
AC-HA016975	PL082U-300-10M8-2	AC-HA016995	PL082U-301-10M8-2
AC-HA016976	PL082V-300-10M8-2	AC-HA016996	PL082V-301-10M8-2
AC-HA016977	PL082W-300-10M8-2	AC-HA016997	PL082W-301-10M8-2
AC-HA016978	PL082T-300-10M8-2	AC-HA016998	PL082T-301-10M8-2
AC-HA010938	PL082X-300-10D6-2	AC-HA010950	PL082X-301-10D6-2
AC-HA010939	PL082Y-300-10D6-2	AC-HA010951	PL082Y-301-10D6-2
AC-HA016979	PL082U-300-10D6-2	AC-HA016999	PL082U-301-10D6-2
AC-HA016980	PL082V-300-10D6-2	AC-HA017000	PL082V-301-10D6-2
AC-HA016981	PL082W-300-10D6-2	AC-HA017001	PL082W-301-10D6-2
AC-HA016982	PL082T-300-10D6-2	AC-HA017002	PL082T-301-10D6-2
AC-HA010940	PL082X-300-10D8-2	AC-HA010952	PL082X-301-10D8-2
AC-HA010941	PL082Y-300-10D8-2	AC-HA010953	PL082Y-301-10D8-2
AC-HA016983	PL082U-300-10D8-2	AC-HA017003	PL082U-301-10D8-2
AC-HA016984	PL082V-300-10D8-2	AC-HA017004	PL082V-301-10D8-2
AC-HA016985	PL082W-300-10D8-2	AC-HA017005	PL082W-301-10D8-2
AC-HA016986	PL082T-300-10D8-2	AC-HA017006	PL082T-301-10D8-2
AC-HA010942	PL082X-300-10D10-2	AC-HA010954	PL082X-301-10D10-2
AC-HA010943	PL082Y-300-10D10-2	AC-HA010955	PL082Y-301-10D10-2
AC-HA016987	PL082U-300-10D10-2	AC-HA017007	PL082U-301-10D10-2
AC-HA016988	PL082V-300-10D10-2	AC-HA017008	PL082V-301-10D10-2
AC-HA016989	PL082W-300-10D10-2	AC-HA017009	PL082W-301-10D10-2
AC-HA016990	PL082T-300-10D10-2	AC-HA017010	PL082T-301-10D10-2
AC-HA011977	PL082X-300-10PM6-2	AC-HA011979	PL082X-301-10PM6-2
AC-HA011978	PL082Y-300-10PM6-2	AC-HA011980	PL082Y-301-10PM6-2
AC-HA017011	PL082U-300-10PM6-2	AC-HA017015	PL082U-301-10PM6-2
AC-HA017012	PL082V-300-10PM6-2	AC-HA017016	PL082V-301-10PM6-2
AC-HA017013	PL082W-300-10PM6-2	AC-HA017017	PL082W-301-10PM6-2
AC-HA017014	PL082T-300-10PM6-2	AC-HA017018	PL082T-301-10PM6-2
AC-HA017356	PL082X-300-10PM8-2	AC-HA017374	PL082X-301-10PM8-2
AC-HA017357	PL082Y-300-10PM8-2	AC-HA017375	PL082Y-301-10PM8-2
AC-HA017358	PL082U-300-10PM8-2	AC-HA017376	PL082U-301-10PM8-2
AC-HA017359	PL082V-300-10PM8-2	AC-HA017377	PL082V-301-10PM8-2
AC-HA017360	PL082W-300-10PM8-2	AC-HA017378	PL082W-301-10PM8-2
AC-HA017361	PL082T-300-10PM8-2	AC-HA017379	PL082T-301-10PM8-2
AC-HA017362	PL082X-300-10H6-2	AC-HA017380	PL082X-301-10H6-2
AC-HA017363	PL082Y-300-10H6-2	AC-HA017381	PL082Y-301-10H6-2
AC-HA017364	PL082U-300-10H6-2	AC-HA017382	PL082U-301-10H6-2
AC-HA017365	PL082V-300-10H6-2	AC-HA017383	PL082V-301-10H6-2
AC-HA017366	PL082W-300-10H6-2	AC-HA017384	PL082W-301-10H6-2
AC-HA017367	PL082T-300-10H6-2	AC-HA017385	PL082T-301-10H6-2
AC-HA017368	PL082X-300-10H8-2	AC-HA017386	PL082X-301-10H8-2
AC-HA017369	PL082Y-300-10H8-2	AC-HA017387	PL082Y-301-10H8-2
AC-HA017370	PL082U-300-10H8-2	AC-HA017388	PL082U-301-10H8-2
AC-HA017371	PL082V-300-10H8-2	AC-HA017389	PL082V-301-10H8-2
AC-HA017372	PL082W-300-10H8-2	AC-HA017390	PL082W-301-10H8-2
AC-HA017373	PL082T-300-10H8-2	AC-HA017391	PL082T-301-10H8-2
AC-HA010936	PL082X-300-10M10-2	AC-HA010948	PL082X-301-10M10-2
AC-HA010937	PL082Y-300-10M10-2	AC-HA010949	PL082Y-301-10M10-2
AC-HA017824	PL082U-300-10M10-2	AC-HA017828	PL082U-301-10M10-2
AC-HA017825	PL082V-300-10M10-2	AC-HA017829	PL082V-301-10M10-2
AC-HA017826	PL082W-300-10M10-2	AC-HA017830	PL082W-301-10M10-2
AC-HA017827	PL082T-300-10M10-2	AC-HA017831	PL082T-301-10M10-2

C C C C C C C C C D D D D D

REVISIONS					
REV#	ECN#	REVISION ACTION	REV.BY:	APPR.BY:	DATE
C	--	新增H6/H8/PM8规格料号	Star	JL	11/20/2020
D	--	Add M10 specification	Star	JL	02/23/2021
E	--	Add Key W/T and add detailded view of lug	Star	JL	04/19/2021
F	--	Change W/T key Angle and change the temperature of technical points	Star	JL	11/09/2021
G	--	Change of Operating temperature,voltage and Dielectric withstanding voltage	JS	JL	08/09/2022
H	--	Add view of dust cover	JS	JL	11/04/2022

E

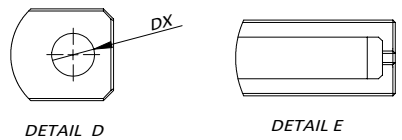

Model No	Through hole size DX
PL082X-30X-10D10-2	∅ 10.50±0.10
PL082X-30X-10D8-2	∅ 8.50±0.10
PL082X-30X-10D6-2	∅ 6.50±0.10

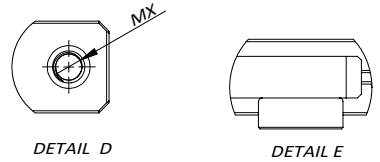

Model No	Punch Nut size MX
PL082X-30X-10PM6-2	M6
PL082X-30X-10PM8-2	M8

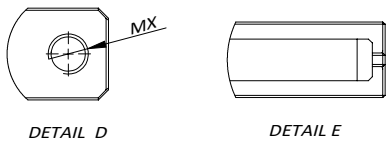

Model No	Thread hole size MX
PL082X-30X-10M10-2	M10
PL082X-30X-10M8-2	M8
PL082X-30X-10M6-2	M6

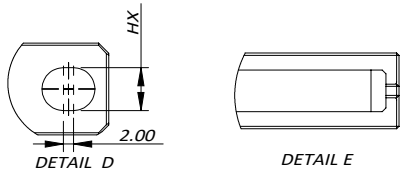

Model No	Slot hole size HX
PL082X-30X-10H10-2	10.50±0.10
PL082X-30X-10H8-2	8.50±0.10
PL082X-30X-10H6-2	6.50±0.10

AMPHENOL TPI

Amphenol Technical Products International Asia.

第三角投影 THIRD ANGLE PROJECTION	页面 SHEET	幅面 SIZE	版次 REV.	比例 SCALE
	2OF 3	A4	H	--

PART NAME: PL300 G2 2POS Rcpt Lug

签名 SIGNATURE		日期 DATE
制图 DRAWN	July.su	11/04/2022
审核 CHECKED		
批准 APPROVAL		

UNLESS OTHERWISE SPECIFIED
1) All dimensions are in metric(mm).
2) Tolerances are as follows:
1.PL DEC ± 1.00
2.PL DEC ± 0.50
3.PL DEC ± 0.20 Angles ±1°

DWG NO: PL082X-30X-10XX-2

CUST PART # | CUST REV.

Key Characteristics Contact Amphenol for Latest Definition: C Critical 关键特性; S Significant 重要特性

THIS DRAWING IS SUPPLIED FOR INFORMATION ONLY. DESIGN FEATURES, SPECIFICATIONS AND PERFORMANCE DATA SHOWN HEREON ARE THE PROPERTY OF THE AMPHENOL CORPORATION. NO RIGHTS OF REPRODUCTION ARE IMPLIED. ALL DIMENSIONS ARE SUBJECT TO NORMAL MANUFACTURING VARIATIONS.

REVISIONS					
REV#	ECN#	REVISION ACTION	REV.BY:	APPR.BY:	DATE
C	--	新增H6/H8/PM8规格料号	Star	JL	11/20/2020
D	--	Add M10 specification	Star	JL	02/23/2021
E	--	Add Key W/T and add detailded view of lug	Star	JL	04/19/2021
F	--	Change W/T key Angle and change the temperature of technical points	Star	JL	11/09/2021
G	--	Change of Operating temperature,voltage and Dielectric withstanding voltage	JS	JL	08/09/2022
H	--	Add view of dust cover	JS	JL	11/04/2022

推荐面板开孔图 Recommended Panel cut out size

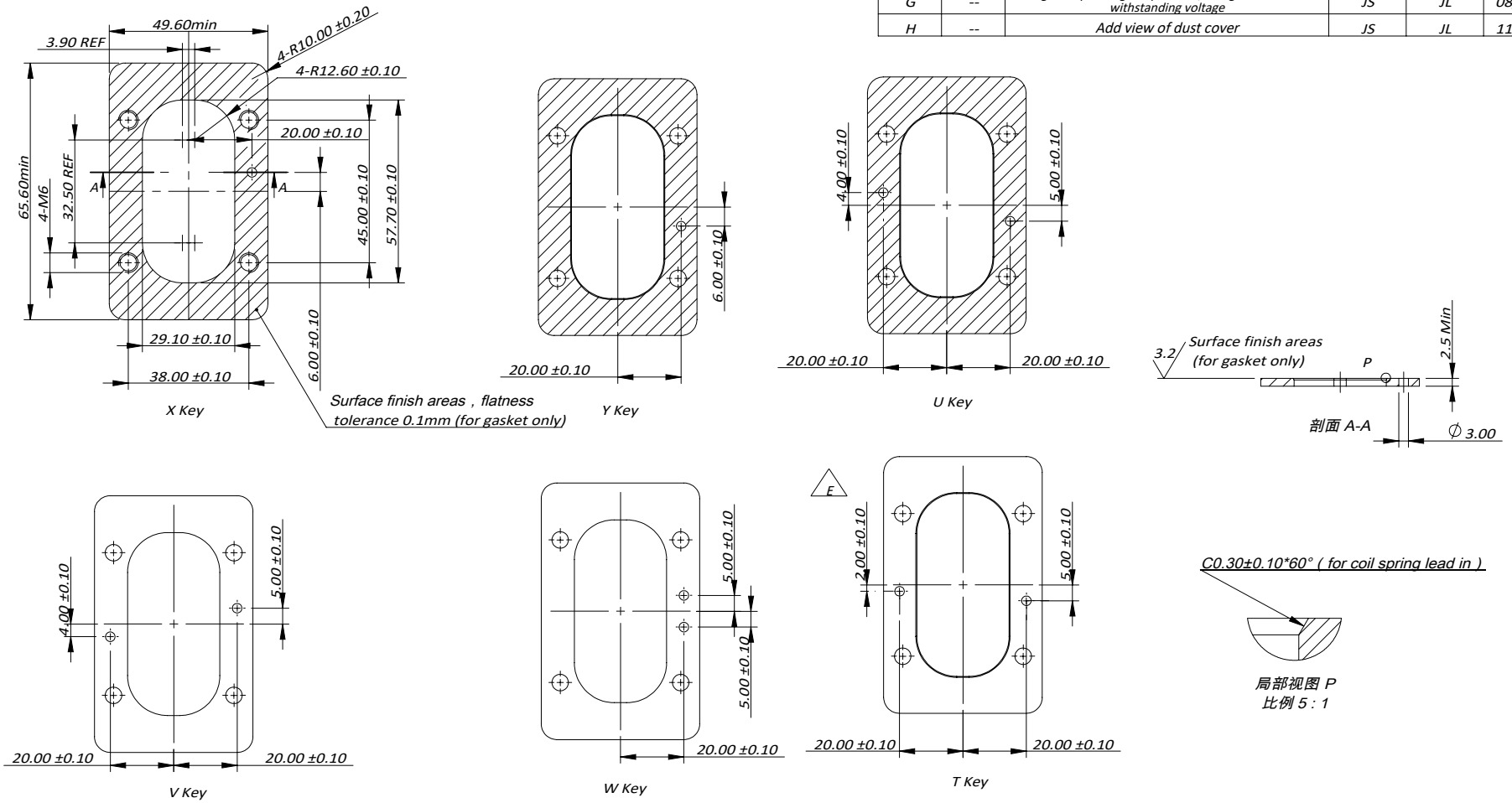

AMPHENOL TPI	Amphenol Technical Products International Asia.				
第三角投影 THIRD ANGLE PROJECTION	页 面 SHEET	幅面 SIZE	版次 REV.	比例 SCALE	PART NAME: PL300 G2 2POS Rcpt Lug
	3 OF 3	A4	H	--	
签 名 SIGNATURE		日期 DATE	UNLESS OTHERWISE SPECIFIED 1) All dimensions are in metric(mm). 2) Tolerances are as follows: 1.PL DEC ± 1.00 2.PL DEC ± 0.50 3.PL DEC ± 0.20 Angles ±1°		DWG NO: PL082X-30X-10XX-2
制 图 DRAWN	July.su	11/04/2022			CUST PART # / CUST REV.
审 核 CHECKED					
批 准 APPROVAL					

Key Characteristics Contact Amphenol for Latest Definition
C Critical 关键特性
S Significant 重要特性

THIS DRAWING IS SUPPLIED FOR INFORMATION ONLY. DESIGN FEATURES, SPECIFICATIONS AND PERFORMANCE DATA SHOWN HEREON ARE THE PROPERTY OF THE AMPHENOL CORPORATION. NO RIGHTS OF REPRODUCTION ARE IMPLIED. ALL DIMENSIONS ARE SUBJECT TO NORMAL MANUFACTURING VARIATIONS.