Customer Drawing

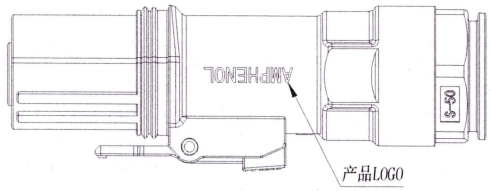

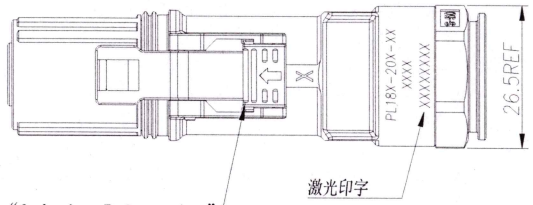

按键颜色见“订购信息”
The color of press key see “Ordering Information”

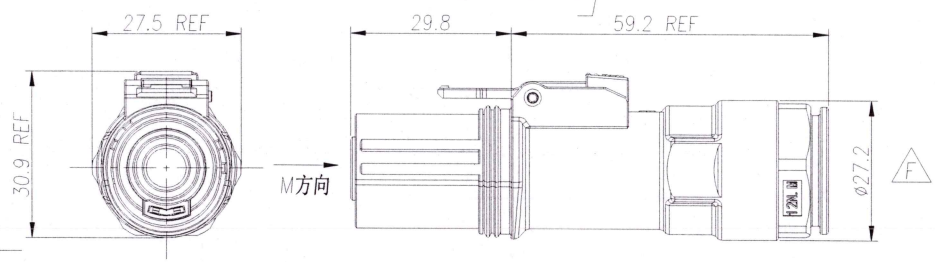

REVISIONS						
REV	ZONE	ECO	DESCRIPTION	DATE	BY	APPR
A	--	--	INITIAL RELEASE	07/14/15	RW	EC
B	--	--	修改尾盖结构	10/12/18	Fred	JL
C	--	--	增加Cable OD	07/22/20	Steven	JL
D	--	--	修改视图错误	11/30/20	Steven	JL
E	--	--	更改防尘盖	04/15/21	Steven	JL
F	--	--	修改尺寸	07/26/22	Chigit	JL

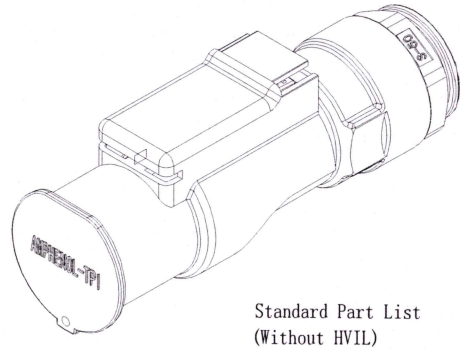

Standard Part List
(With HVIL)

P/N	Accepted Wire OD
PL18X-201-25	13.5±0.3
PL18Y-201-25	
PL18U-201-25	
PL18V-201-25	
PL18W-201-25	
PL18X-201-35	14.5±0.5
PL18Y-201-35	
PL18U-201-35	
PL18V-201-35	
PL18W-201-35	
PL18X-201-50	17.0±0.5
PL18Y-201-50	
PL18U-201-50	
PL18V-201-50	
PL18W-201-50	

Standard Part List
(Without HVIL)

C

P/N	Accepted Wire OD
PL18X-200-25	13.5±0.3
PL18Y-200-25	
PL18U-200-25	
PL18V-200-25	
PL18W-200-25	
PL18X-200-35	14.5±0.5
PL18Y-200-35	
PL18U-200-35	
PL18V-200-35	
PL18W-200-35	
PL18X-200-50	17.0±0.5
PL18Y-200-50	
PL18U-200-50	
PL18V-200-50	
PL18W-200-50	

订购信息 Ordering Information

PL18 X - 20 1 - 50

键位及颜色 Key & Color	高压互锁 HVIL	线缆大小 Cable Size
"X", 橙色 Orange	0 ,不带互锁 No HVIL	"50"=50mm²
"Y", 黑色 Black	1 ,带互锁 With HVIL	"35"=35mm²
"U", 黄色 Yellow		"25"=25mm²
"V", 绿色 Green		
"W", 红色 Red		

Amphenol TPI
2022 -07- 26
REGISTERED COPY

规格参数(Spec.):
1. 工作温度 Operating temperature: -40° C～+125° C.
2. 额定电流 Current rating(Connector Only):
   25mm²:120 A;35mm²:150 A;50mm²:200 A.
3. 额定电压 Operating voltage:1000 VDC.
4. 耐 电 压 Dielectric withstanding voltage: 5000 VDC.
5. 防护等级 Protection class:IP67 & IP2X.
6. 电磁屏蔽 Shielding.
7. 机械寿命 Mating cycle:100 Min.
8. 带自动二次锁扣 Automatic secondary lock.
9. 带高压互锁 Electrical interlock (HVIL).
10. 配对插座 Mating receptacle : See drawing "PL00-200"

Key Characteristics Contact Amphenol for Latest Definition
C Critical 关键特性
S Significant 重要特性

AMPHENOL TPI

Amphenol Technical Products International GZ

第三角投影 THIRD ANGLE PROJECTION	页面 SHEET	幅面 SIZE	版次 REV.	比例 SCALE	PART NAME: PowerLok 8mm 1POS Plug Assy
	1 of 1	A3	F		

签名 SIGNATURE		日期 DATE	UNLESS OTHERWISE SPECIFIED	DWG NO: PL18-200
制图 DRAWN	Chigit	07/26/22	1) All dimensions are in metric(mm). 2) Tolerances are as follows:	
审核 CHECKED		07/26/2022	0 PL DEC ±1.00	CUST PART #: N/A
批准 APPROVAL		June-2022.7.26	1 PL DEC ±0.50 2 PL DEC ±0.20 Angles ±1°	CUST REV. -

THIS DRAWING IS SUPPLIED FOR INFORMATION ONLY. DESIGN FEATURES, SPECIFICATIONS AND PERFORMANCE DATA SHOWN HEREON ARE THE PROPERTY OF THE AMPHENOL CORPORATION. NO RIGHTS OF REPRODUCTION ARE IMPLIED. ALL DIMENSIONS ARE SUBJECT TO NORMAL MANUFACTURING VARIATIONS.

THIS DRAWING IS SUPPLIED FOR INFORMATION ONLY. DESIGN FEATURES, SPECIFICATIONS AND PERFORMANCE DATA SHOWN HEREON ARE THE PROPERTY OF THE AMPHENOL CORPORATION. NO RIGHTS OF REPRODUCTION ARE IMPLIED. ALL DIMENSIONS ARE SUBJECT TO NORMAL MANUFACTURING VARIATIONS.

Customer Drawing

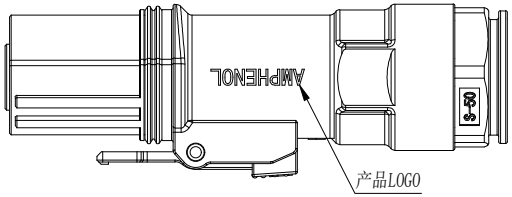

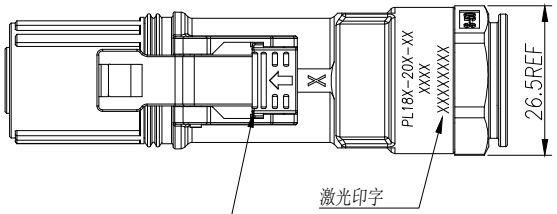

按键颜色见“订购信息”
The color of press key see “Ordering Information”

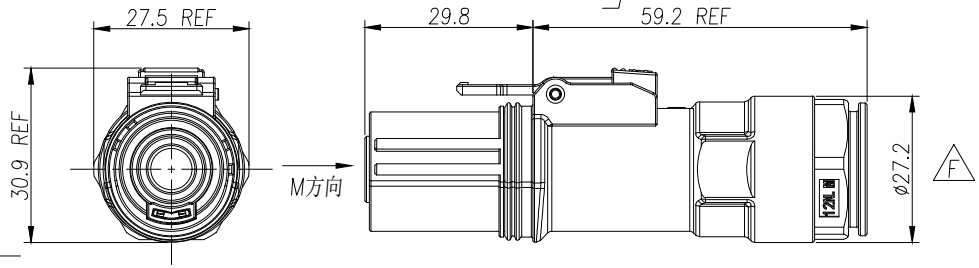

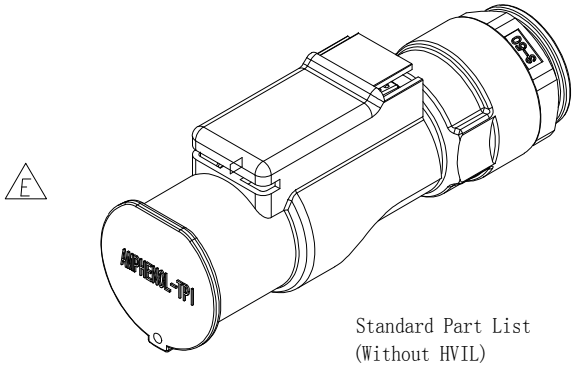

REVISIONS

REV	ZONE	ECO	DESCRIPTION	DATE	BY	APPR
A	--	--	INITIAL RELEASE	07/14/15	RW	EC
B	--	--	修改尾盖结构	10/12/18	Fred	JL
C	--	--	增加CableOD	07/22/20	Steven	JL
D	--	--	修改视图错误	11/30/20	Steven	JL
E	--	--	更改防尘盖	04/15/21	Steven	JL
F	--	--	修改尺寸	07/26/22	Chigit	JL

订购信息 Ordering Information

PL18 X - 20 1 - 50

键位及颜色 Key & Color
- "X", 橙色 Orange
- "Y", 黑色 Black
- "U", 黄色 Yellow
- "V", 绿色 Green
- "W", 红色 Red

高压互锁 HVIL
- 0 ,不带互锁 No HVIL
- 1 ,带互锁 With HVIL

线缆大小 Cable Size
- "50"=50mm²
- "35"=35mm²
- "25"=25mm²

Standard Part List
(With HVIL)

P/N	Accepted Wire OD
PL18X-201-25	13.5±0.3
PL18Y-201-25	
PL18U-201-25	
PL18V-201-25	
PL18W-201-25	
PL18X-201-35	14.5±0.5
PL18Y-201-35	
PL18U-201-35	
PL18V-201-35	
PL18W-201-35	
PL18X-201-50	17.0±0.5
PL18Y-201-50	
PL18U-201-50	
PL18V-201-50	
PL18W-201-50	

Standard Part List
(Without HVIL)

C

P/N	Accepted Wire OD
PL18X-200-25	13.5±0.3
PL18Y-200-25	
PL18U-200-25	
PL18V-200-25	
PL18W-200-25	
PL18X-200-35	14.5±0.5
PL18Y-200-35	
PL18U-200-35	
PL18V-200-35	
PL18W-200-35	
PL18X-200-50	17.0±0.5
PL18Y-200-50	
PL18U-200-50	
PL18V-200-50	
PL18W-200-50	

规格参数(Spec.):
1. 工作温度 Operating temperature: -40° C～+125° C.
2. 额定电流 Current rating(Connector Only):
   25mm²:120 A;35mm²:150 A;50mm²:200 A.
3. 额定电压 Operating voltage:1000 VDC.
4. 耐 电 压 Dielectric withstanding voltage: 5000 VDC.
5. 防护等级 Protection class:IP67 & IP2X.
6. 电磁屏蔽 Shielding.
7. 机械寿命 Mating cycle:100 Min.
8. 带自动二次锁扣 Automatic secondary lock.
9. 带高压互锁 Electrical interlock (HVIL).
10. 配对插座 Mating receptacle : See drawing "PL00-200"

Key Characteristics Contact Amphenol for Latest Definition
- C Critical 关键特性
- S Significant 重要特性

AMPHENOL TPI

Amphenol Technical Products International GZ

第三角投影 THIRD ANGLE PROJECTION	页面 SHEET	幅面 SIZE	版次 REV.	比例 SCALE
	1 OF 1	A3	F	

PART NAME: PowerLok 8mm 1POS Plug Assy

签名 SIGNATURE		日期 DATE
制图 DRAWN	Chigit	07/26/22
审核 CHECKED		
批准 APPROVAL		

UNLESS OTHERWISE SPECIFIED
1) All dimensions are in metric(mm).
2) Tolerances are as follows:
0 PL DEC ±1.00
1 PL DEC ±0.50
2 PL DEC ±0.20
Angles ±1°

DWG NO: PL18-200

CUST PART #: N/A

CUST REV. -